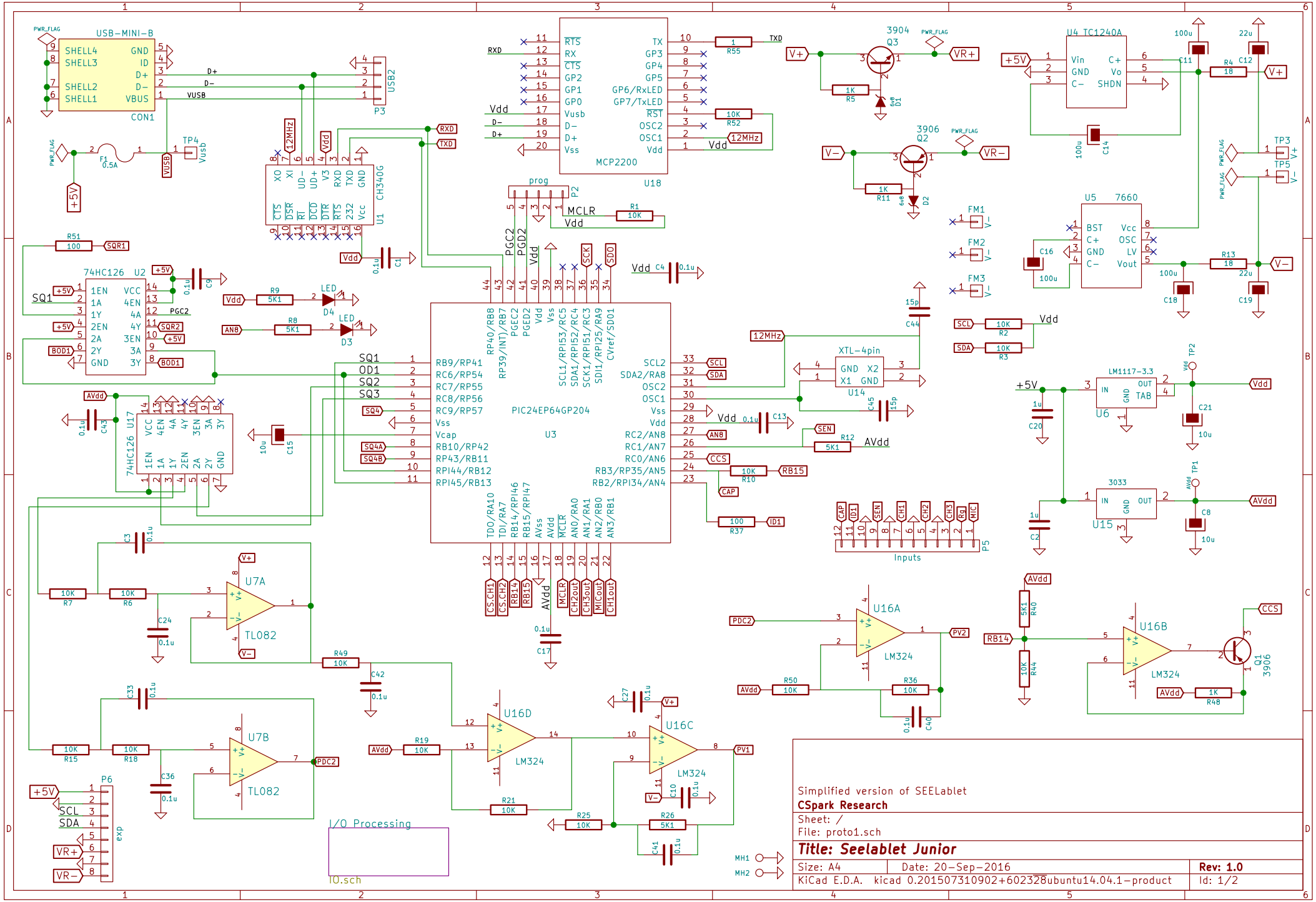
USB-MINI-B
CON1
USB2
P3
CH340G
U1
MCP2200
U18
PIC24EP64GP204
U3
74HC126
U2
74HC126
U17
U4 TC1240A
U5 7660
U6
LM1117-3.3
U15
3033
XTL-4pin
U14
U7A
TL082
U7B
TL082
U16A
LM324
U16B
LM324
U16C
LM324
U16D
LM324
Q1
3906
Q2
3906
Q3
3904
Inputs
P5
P6
exp
I/O Processing
IO.sch
Simplified version of SEELablet
CSpark Research
Sheet: /
File: proto1.sch
Title: Seelablet Junior
Size: A4
Date: 20-Sep-2016
Rev: 1.0
KiCad E.D.A. kicad 0.201507310902+602328ubuntu14.04.1-product
Id: 1/2

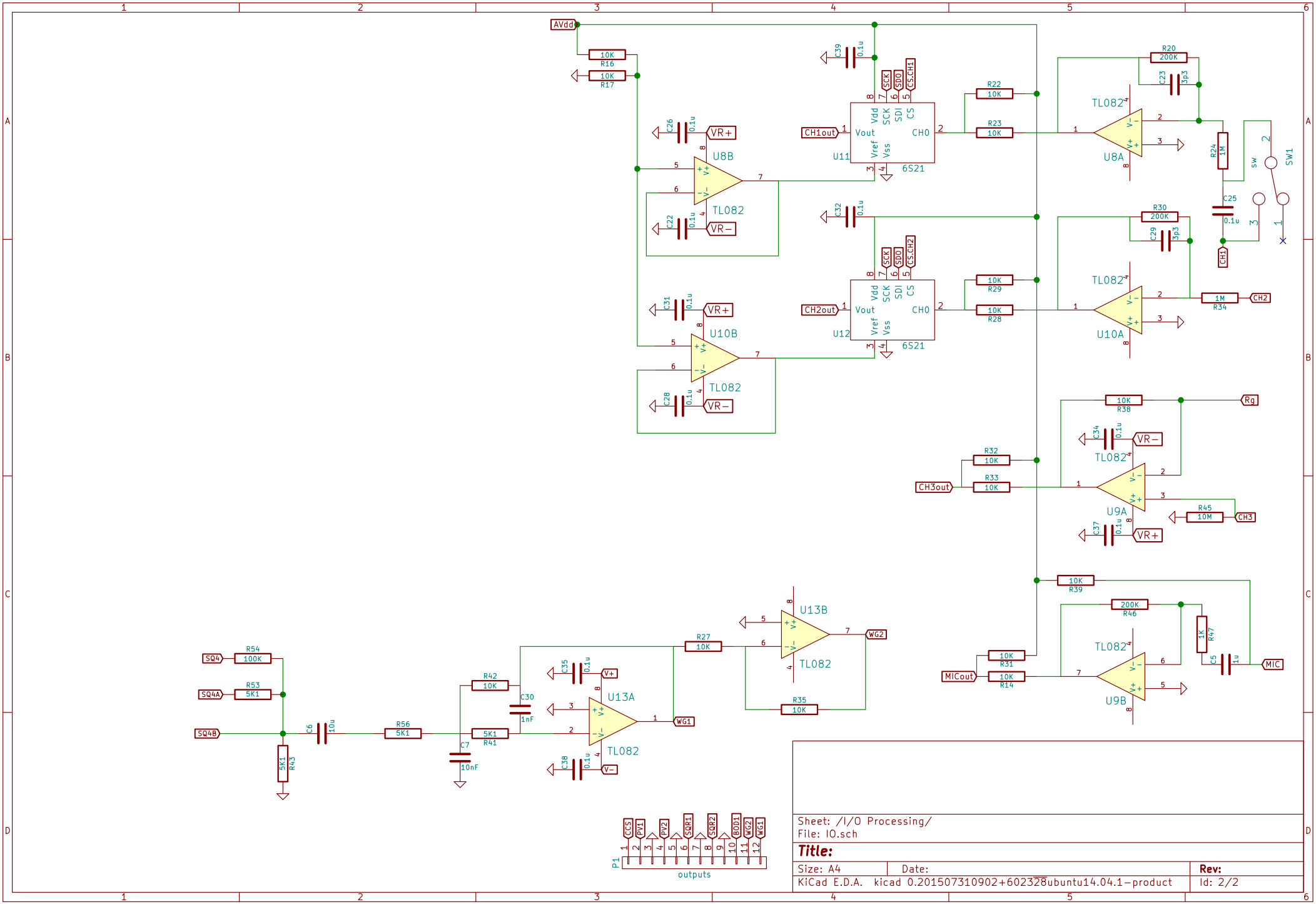
AVdd
R16 10K
R17 10K
C39 0.1u
SCK
SDO
CS.CH1
CH1out
Vdd SCK SDI CS
Vout CH0
Vref Vss
U11 6S21
R22 10K
R23 10K
C26 0.1u
VR+
U8B
TL082
C22 0.1u
VR−
R20 200K
C23 3p3
TL082
U8A
R24 1M
SW
SW1
C25 0.1u
CH1
C32 0.1u
CH2out
U12 6S21
R29 10K
R28 10K
C29 3p3
R30 200K
1M R34
CH2
C31 0.1u
U10B
C28 0.1u
U10A
R38 10K
Rg
C34 0.1u
R32 10K
CH3out
R33 10K
U9A
R45 10M
CH3
C37 0.1u
R39 10K
R46 200K
1K R47
C5 1u
MIC
MICout
R31 10K
R14 10K
U9B
SQ4 R54 100K
SQ4A R53 5K1
SQ4B
R43 5K1
C6 10u
R56 5K1
R42 10K
R41 5K1
C30 1nF
C7 10nF
C35 0.1u
C38 0.1u
U13A
R27 10K
U13B
WG2
WG1
R35 10K
P1
CCS PV1 PV2 SQR1 SQR2 BOD1 WG2 WG1
outputs
Sheet: /I/O Processing/
File: IO.sch
Title:
Size: A4
Date:
Rev:
KiCad E.D.A. kicad 0.201507310902+602328ubuntu14.04.1-product
Id: 2/2